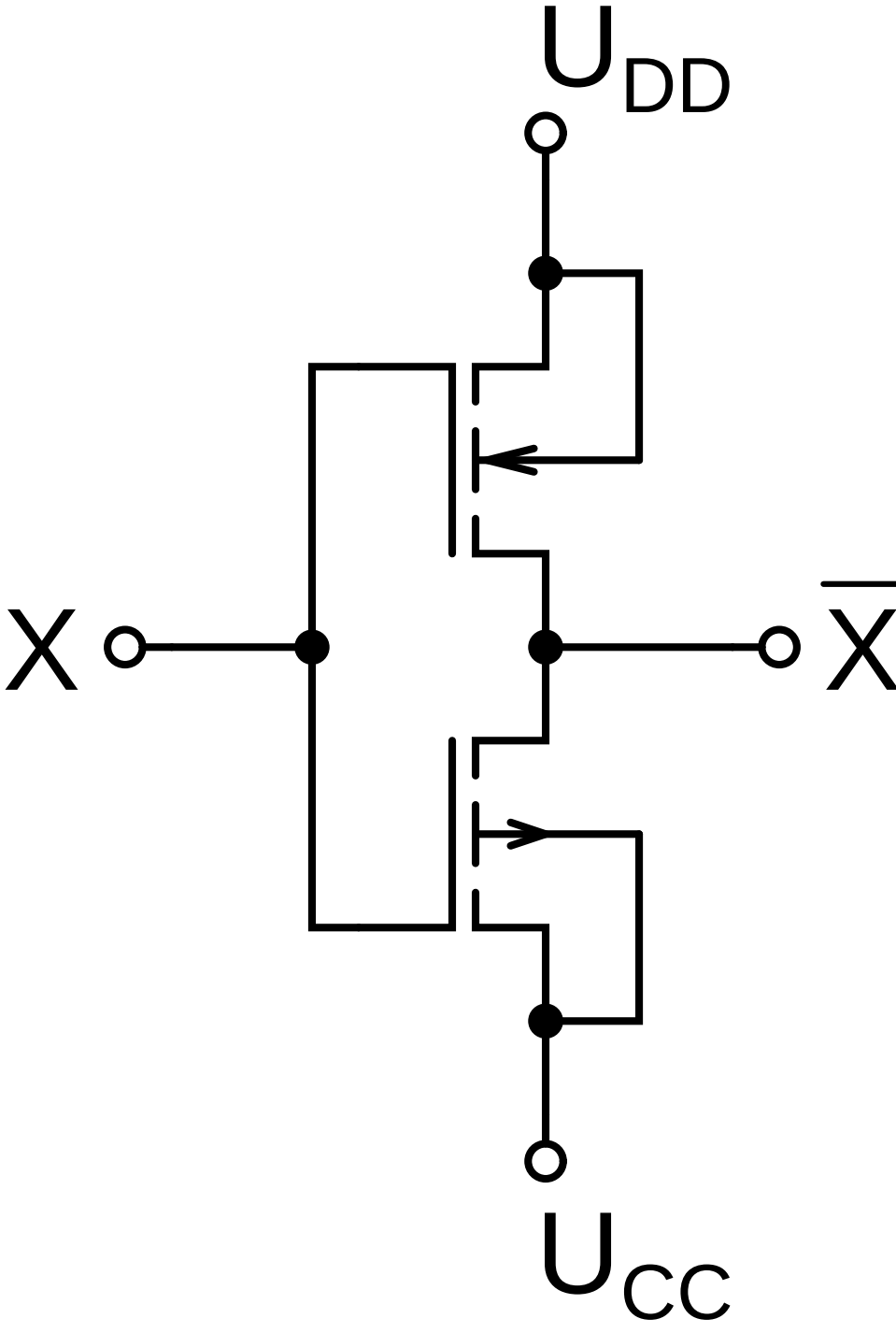
U_{DD}
X
$\overline{X}$
U_{CC}