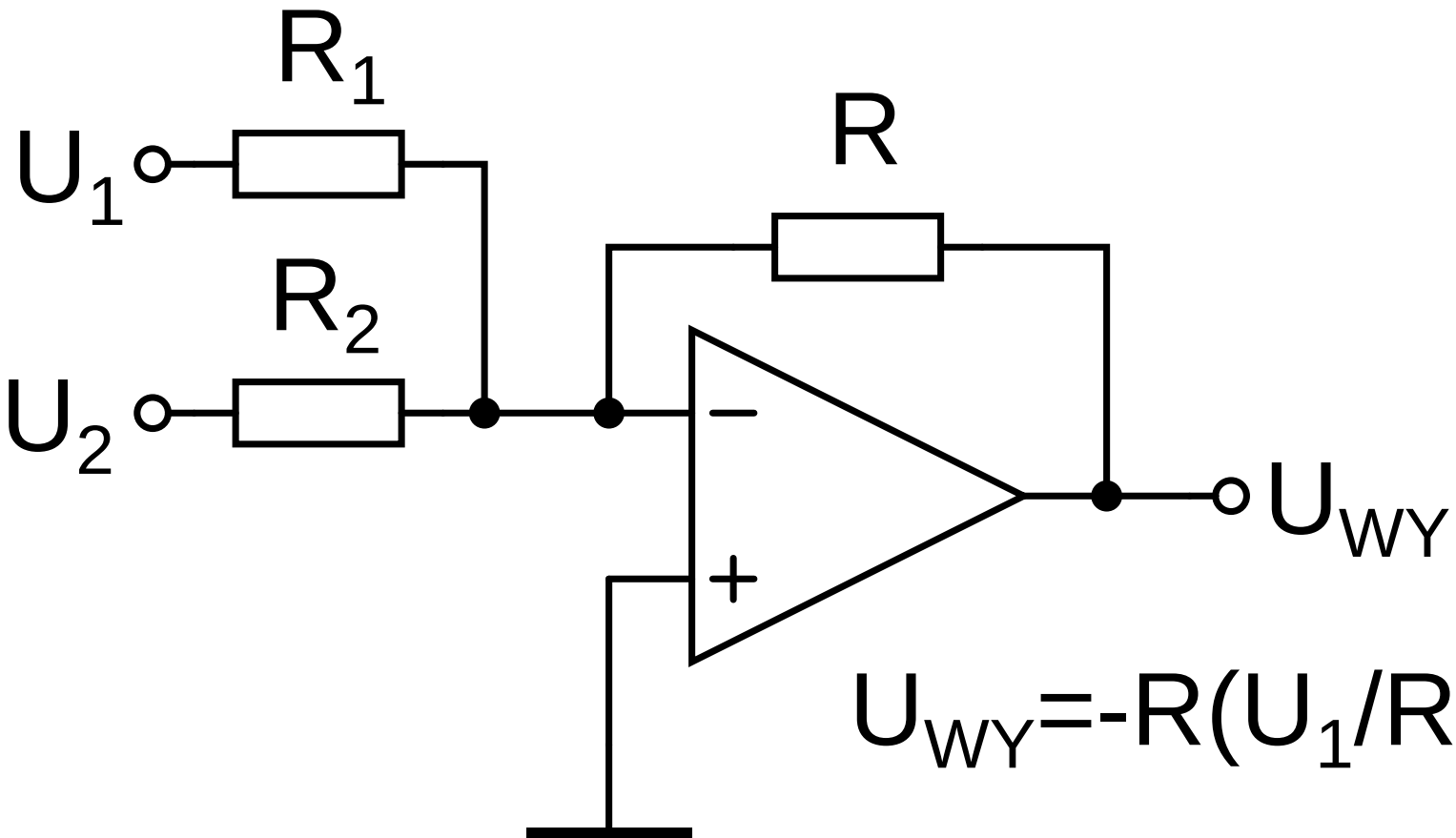

$$U_{WY}=-R(U_1/R_1+U_2/R_2)$$