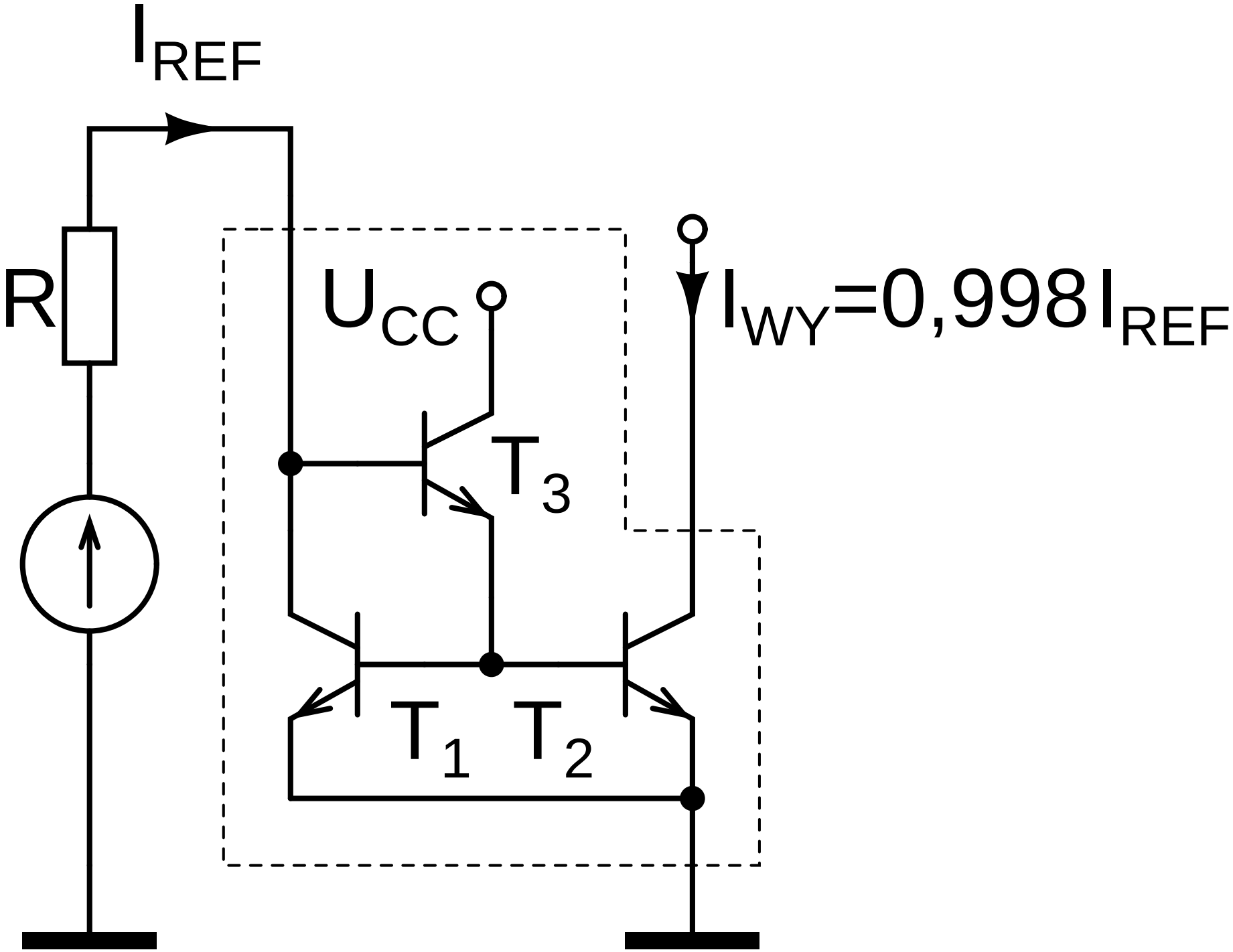
I_REF
R
U_CC
I_WY=0,998I_REF
T_3
T_1
T_2