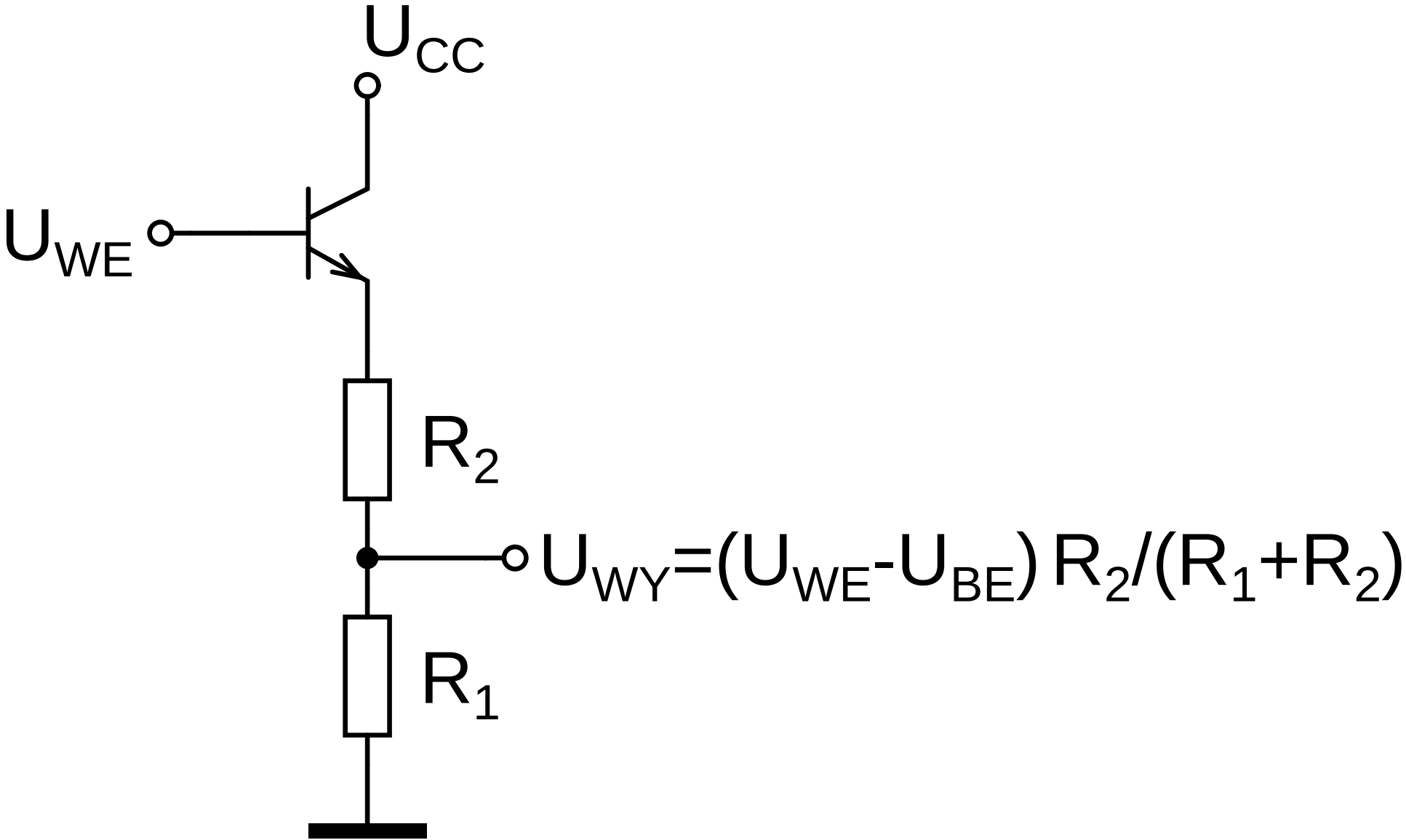
U_{CC}
U_{WE}
R_2
$U_{WY}=(U_{WE}-U_{BE})\,R_2/(R_1+R_2)$
R_1