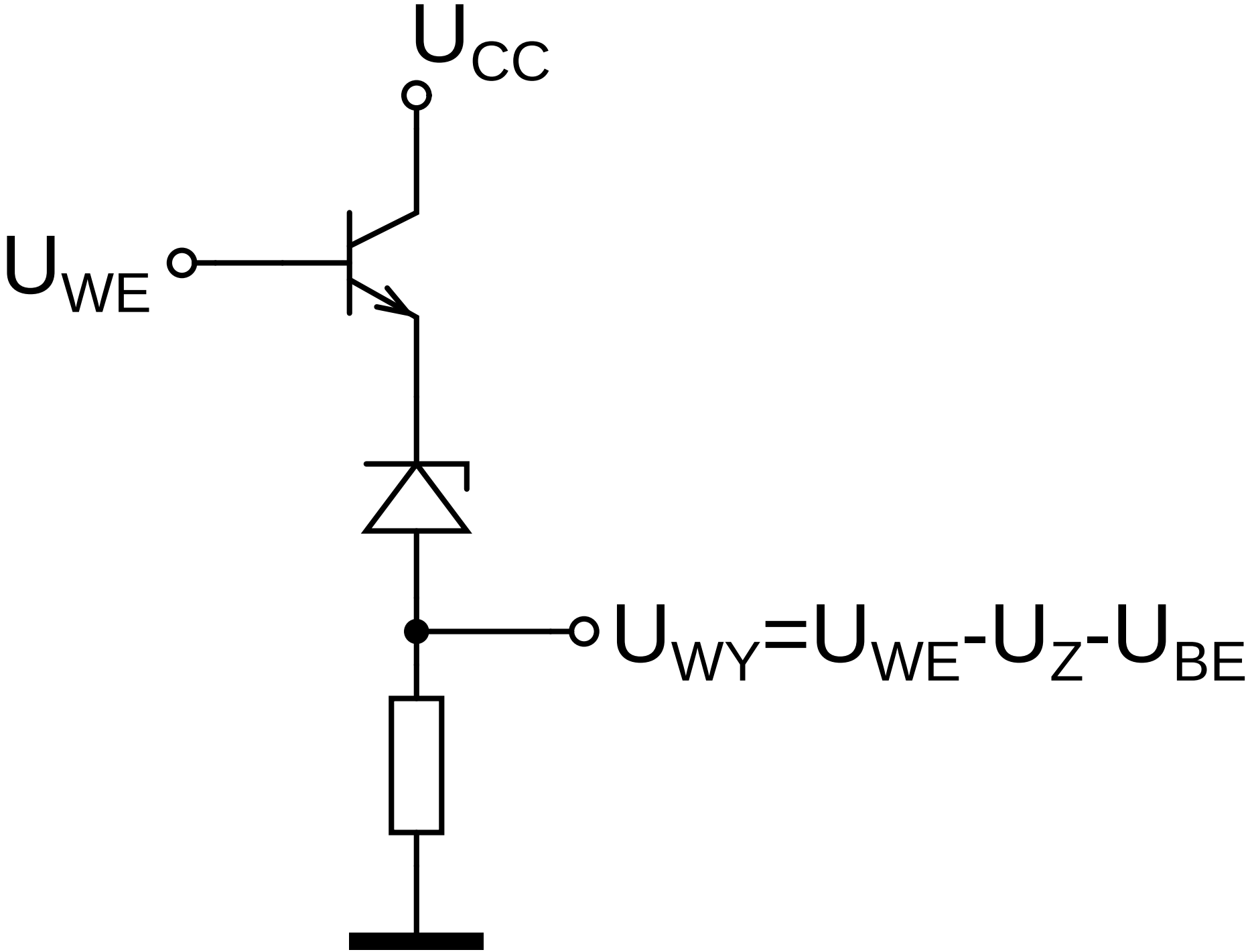
U_{CC}
U_{WE}
$U_{WY}=U_{WE}-U_Z-U_{BE}$