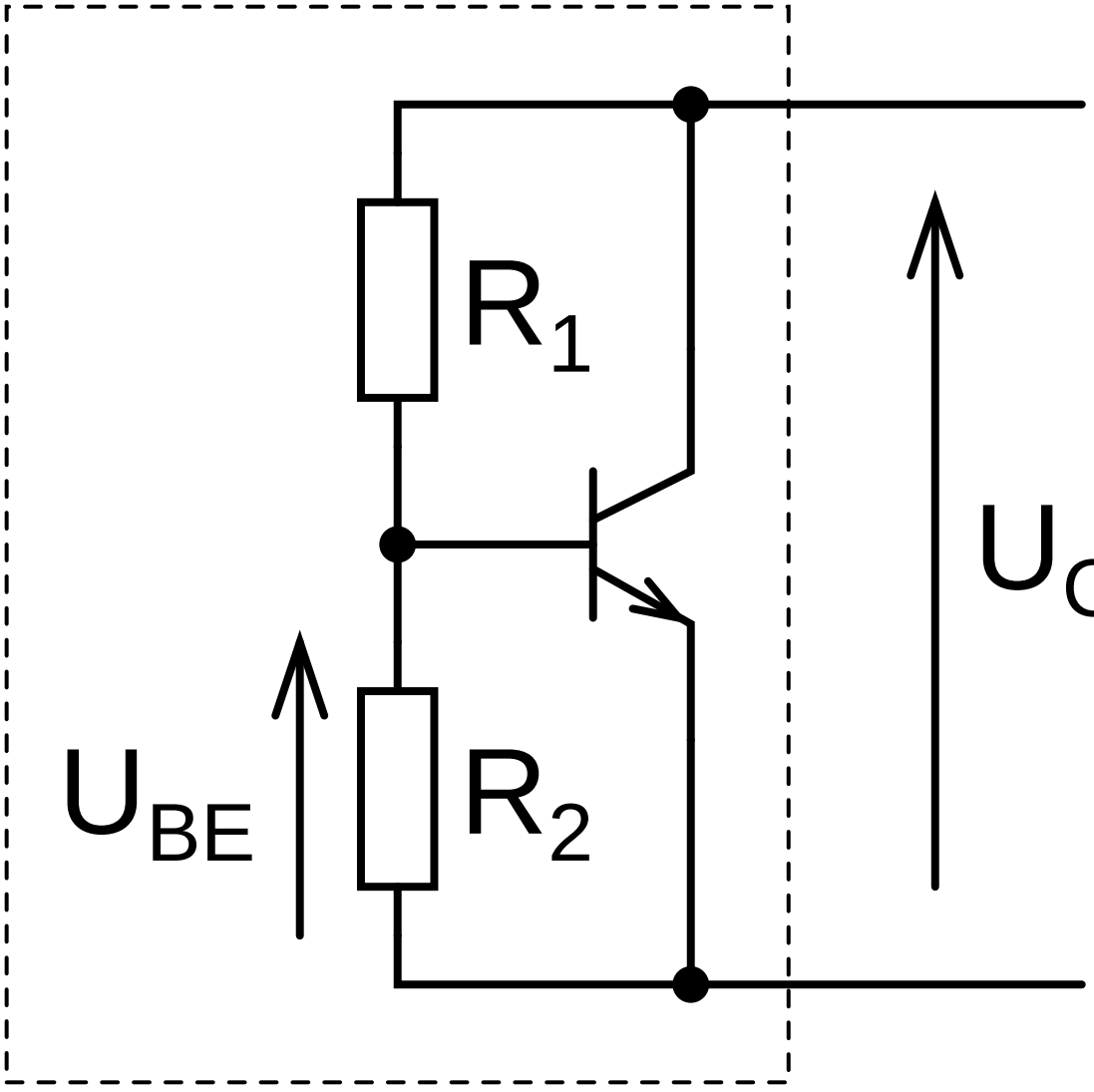

$$U_{CE}=U_{BE}(1+R_1/R_2)$$