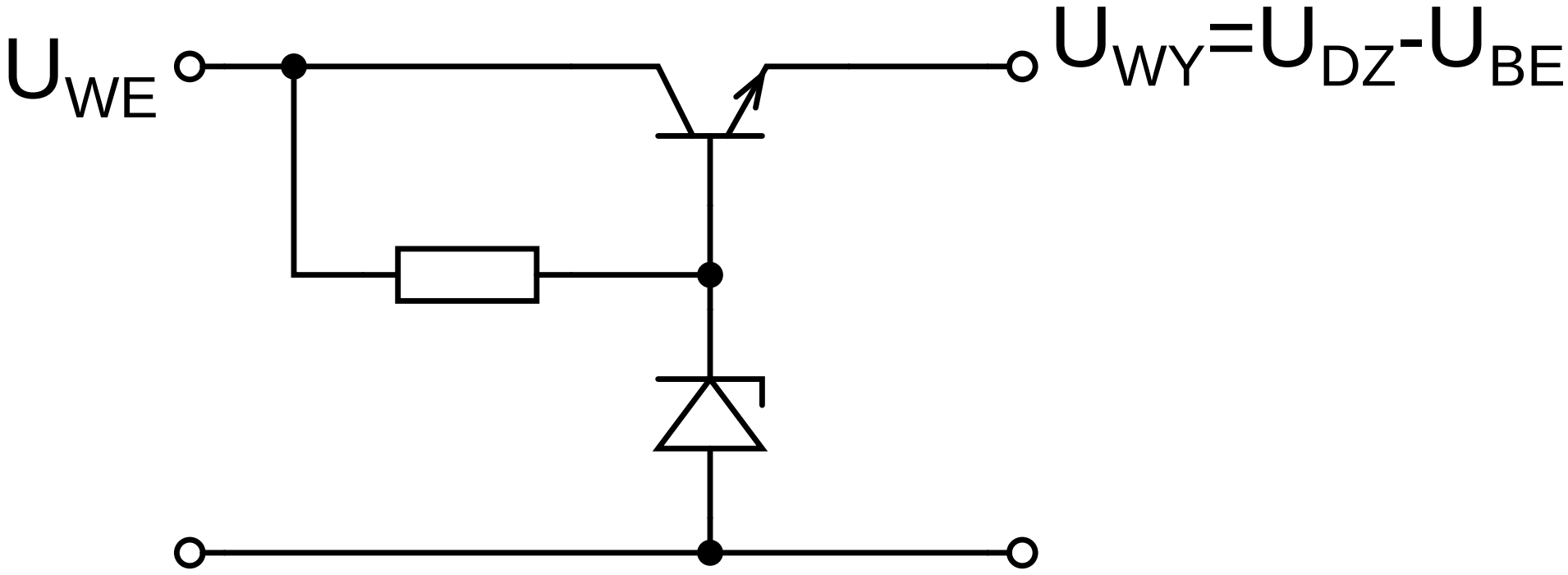
U_{WE}
$U_{WY}=U_{DZ}-U_{BE}$